卷册检索号 SEARCH NO. OF THE VOLUME
MLHVDC-LCS-ECI-DD-CS-0803 30-B003701S-T0803

第 1 页 共 1 页
PAGE 1 OF 1

图纸文件目录（首页）

CATALOG OF DRAWING DOCUMENTS (HEAD PAGE)

拉合尔±660kV换流站 工程 施工图 阶段
±660kV Lahore Converter Station PROJECT Detail Design DESIGN STAGE

结构 专业 第 08 卷 第 03 册
Structure SPECIALITY VOLUME BOOK

卷册名称 极1阀厅侧墙支架及避雷线塔图
Volume name The structure drawing of Side wall support and Lightning rod tower for Pole 1 valve hall

批 准 APPROVED BY	
审 核 REVIEWED BY	
设计/勘测 DESIGNED BY/ SURVEYED BY	王新 2018.06.15
图 纸 6 张 DRAWING NOS.	打印件 本 PRINTED COPIES NOS.

序号 No.	图 号 DRAWING NO.	文 件 名 称 DOCUMENT TITLE	版本 EDITION	张 NOS.	本 NOS.	备注 REMARKS
01	30-B003701S-T0803-001	钢构架加工说明 Specification of Steel Gantry	A	1		
02	30-B003701S-T0803-002	极1阀厅12.41米避雷线塔BLXT-1结构图(位于混凝土柱上) Structure drawing of 12.41m height lightning rod tower BLXT-1 for Pole 1 valve hall (Over the concrete column)	A	1		
03	30-B003701S-T0803-003	极1阀厅8.1米避雷线塔BLXT-2结构图(位于阀厅钢柱上) Structure drawing of 8.1m height lightning rod tower BLXT-2 for Pole 1 valve hall (Over valve steel column)	A	1		
04	30-B003701S-T0803-004	极1阀厅中性线侧墙支柱绝缘子C1支架及避雷器C2支架结构图 The support structure drawing of Neutral Insulator C1 and Arrester C2 on the side of Pole 1 valve wall	A	1		
05	30-B003701S-T0803-005	极1阀厅侧墙直流极线接地开关D3支架结构图 The support structure drawing of Earthing switch D3 on the side of Pole 1 valve wall	A	1		
06	30-B003701S-T0803-006	极1阀厅侧墙中性接地开关D4支架结构图 The support structure drawing of Neutral earthing switch D4 on the side of Pole 1 valve wall	A	1		

1. GENERAL NOTES:

All dimemsions are in millimeters where not otherwise noted.
Note however that levels are noted in meters.
All steel members should adopt the anti-corrosive treatment of hot dip galvanizing.
The thickness of galvanization for member with more than 6.4mm thickness shall not be less than 825 g/m² on all steel section, and for member with more than 4.8 mm and less than 6.4mm thickness shall not be less than 600 g/m², and for member with less than 4.8mm thickness shall not be less than 530 g/m². Threaded work shall have a coating of not less than 305 g/m²

2.MATERIALS:

Structural steel:
All steel material incorporated into the structure shall be grade Q235B and Q345B.
For section steel and plate, if the profile name is added with the letter "H", it is high tensile steel Q345B, or else is mild steel Q235B.
For steel grade Q235B, the yield strength shall not be less than 235MPa;
For steel grade Q345B, the yield strength shall not be less than 345MPa.
Structural bolts, nuts and washers:
Bolts shall be of steel grade 6.8 , hot dip galvanized, and match nuts and washers;
Nuts and washers shall be of steel grade 6.8, hot dip galvanized.
Welding rod:
The type of selected welding rod shall match the base metal in strength.
For steel Q235B, adpot type E43xx;
For steel Q345B, adpot type E50xx;

3.MANUFACTURE:

Only after making set-out detail, all members and gusset plates can be cut in the manufactory. The sizes of members listed in the steel schedule are only used to estimate total amount of steel.

In the fabrication process of steel gantry tower and girder members, trial assembly shall be done and then produce in batches.
Only after steel members of gantry tower and girder must match the requirements of the relevant design drawings and standards, they can be transported to the construction-site.
Welding shall be finished before hot dip galvanizing.
In order to avoid bending, the hanging points shall be properly selected while galvanized steel members are taken out from the galvanization caldron,
All production welding shall be carried out in accordance with the requirements of the relevant AWS of welding.
The leg size of fillet welds shoud not be less than the thickness of the thinner part welded, but not more than 1.2 times that.
For the thick plate , grooving should be adopted in order to ensure the strength of connection.

The spacing between ends of angles shall be 10mm.
For the type of inside splice angle, the angle of splice angle will be filleted.
For the type of outer splice angle, the inside arc of splice angle will be cut into right-angle.
The standard dimensions of steel angle neat line and bolt, max.allowable diameter of bolt hole should be taken from Table 1, where not otherwise noted in the drawing .
The standard spacing between centres of bolts , edge and end distances on steel angles and gussets should be taken from Table 2, where not otherwise noted in the drawing.
All specs of bolts and washers should be taken from Table 3.

4.TRANSPORTATION AND STACKING:

During the transportation, the same kind of members should be tied up into bundles. To avoid the deformation of the members and the damage of galvanized layer due to mutual collision, the sleepers should be lined at the bottom of the members and between their layers.
After the transporting the membes to the construction-site, they should be piled separately according to the numbe of gantry tower and girder to avoid confusion during asembly.
The damaged part of zinc layer, which is caused by transportation and hoisting, should be cleaned and then brushed with zinc rich paint.

5.After erection of gantry structure,the holding-down pad shall be welded with the leg slab ,then brushed with zinc rich paint.
The holding-down pad shall be welded with the leg bottom slab ,then brushed with zinc rich paint.
6.For steel Q235B shall confirm to GB/T 700;for steel Q345B shall confirm to GB/T 1591;for blots shall confirm to GB/T 5780; for nuts shall confirm to GB/T 41;for plain washer shall confirm to GB/T95;for spring washer shall confirm to GB/T 93.

1. 总说明:

标高标注的单位为米。
除特殊注明外，所有标注尺寸单位为毫米。
所有钢构件采用热浸锌防腐处理。
厚度6.4mm及以上构件镀锌厚度不小于825g/m²，厚度大于4.8mm且小于6.4mm构件镀锌厚度不小于600g/m²，厚度小于等于4.8mm构件镀锌厚度不小于530g/m²，螺丝扣的镀锌量不小于305g/m²。

2. 材料:

钢材:
钢结构所用的钢材为Q235B和Q345B级钢材.
图中型钢和钢板型号前标有字母"H"的为高强低合金钢Q345B，未标注字母"H"为普通钢Q235B。
对于Q235B级的钢材，其屈服强度不小于235MPa；
对于Q345B级的钢材，其屈服强度不小于345MPa。
螺栓，螺母和垫圈:
螺栓应为6.8级的热浸锌件，带有螺母、平垫圈和弹簧垫圈；
螺母、垫圈应为6.8级的热浸锌件。
焊条:
焊条类型应与连接母材材质匹配。
对于Q235B钢材，采用E43xx型焊条；
对于Q345B钢材，采用E50xx型焊条.

3. 加工制造:

所有构件及节点板均需放样后下料，钢材明细表中的构件尺寸仅供备料用。

钢结构加工过程中必须进行试组装，然后才能成批加工。
钢结构加工必须满足相关图纸和验收规范要求方能运输到现场。
焊接构件应在完成焊接后再镀锌。
为避免镀锌构件从锌锅中取出时发生弯曲，应选择合适的吊点。
构件焊接应按照相应的美国焊接规程、规范的要求进行。
角焊缝高度不小于连接构件的最小厚度，但不大于1.2倍的连接构件的最小厚度。
对于较厚的焊件需采用坡口焊，保证连接强度。

两角钢对接接头处的间隙为10mm。
内包角钢连接时，采用铲肉包角钢背的方法，外包角钢时采用铲外包角钢弧的方法。
角钢基准线和螺栓准线除图中注明外，应按表1采用。
角钢及节点板的螺栓间距、边距除图中注明外，应按表2采用。
各种螺栓规格、垫圈规格应按表3采用。

4. 运输与堆放:

运输期间，同类构件应捆绑成束堆放在一起。枕木放在构件末端和层间已防止变形和由于相互碰撞带来镀锌层的破坏。
构件运输到现场后，柱梁构件应分离堆放，以防组装期间带来混淆。
由于运输和吊装破坏的镀锌层部分，应先清洗，然后涂刷富锌漆。

5. 构架安装完毕后，地脚螺栓垫板与柱脚焊接，刷富锌漆防腐。
构架底脚板与垫板固焊，焊后刷富锌漆防腐。
6.所有钢材均为轧制，且Q235B级钢材应符合现行国家标准GB/T700,Q345B级钢材应符合现行国家标准GB/T1591,螺栓应符合现行国家标准GB/T5780,螺母应符合现行国家标准GB/T41,平垫圈应符合现行国家标准GB/T95,弹簧垫圈应符合现行国家标准GB/T93.

TABLE 1

No. 编号	角钢规格 FLANGE DIMENSION L	BOLT DIMESION 螺栓准线距 SINGLE LINE 单排 G	DOUBLE LINES 双排 G1	DOUBLE LINES 双排 G2	MAX. ALLOWABLE DIAMETER OF BOLT HOLE 最大允许开孔直径 ø
1	40	20			13.5
2	45	23			17.5
3	50	25			
4	56	28			
5	63	30			21.5
6	70	35			
7	75	38			
8	80	40			
9	90	45			
10	100	50			
11	110	55	45	75	
12	125	60	50	85	
13	140	70	55	90	25.5
14	160	80	60	105	
15	180	90	65	120	
16	200	100	75	135	

Note: the unit of all values listed in the table is millimeter.

TABLE 2

NOMINAL DIA OF BOLT 螺栓直径	DIA. DE AGUJERO 螺栓孔直径	DISTANCE BETWEEN CENTRES 螺栓孔距 SINGLE LINE 单排 S1	DOUBLE LINES 双排 S2	EDGE AND END DISTANCE 螺栓边距及端距 Ld	Lz	La
12	13.5	40	60	25	>17	>18
16	17.5	50	80	25	>21	>23
20	21.5	60	100	30	>26	>28
24	25.5	80	120	40	>31	>33

Note: the unit of all values listed in the table is millimeter.
"Lz" is the edge distance for a rolled edge.
"La" is the edge distance for a sheared edge.
"Ld" is the end distance.

TABLE 3

COMPONENTS 构件名称	GRADE 等级	SPEC. 规格 (M X L1)	SYMBOL 符号	NO THREADED LENGTH 无扣长 L2 (mm)	CLAMPING LENGTH 夹紧厚度 (mm)	WEIGHT 重量(kg)	TORQUE 扭矩(N*m)
PERNO 螺栓	6.8	M12x35	●	6	7 ~ 11	0.0715	45
		M12x40	●	11	12 ~ 16	0.0759	
		M12x45	●	16	17 ~ 22	0.0802	
		M16x40	◪	6	7 ~ 12	0.1535	120
		M16x50	◪	12	13 ~ 22	0.1695	
		M16x60	◪	22	23 ~ 32	0.1855	
		M16x70	◪	32	33 ~ 42	0.2015	
		M20x45	○	8	9 ~ 15	0.2877	230
		M20x55	⊘	15	16 ~ 25	0.3129	
		M20x65	⊠	25	26 ~ 35	0.3381	
		M20x75	⊘	35	36 ~ 45	0.3633	
		M20x85	⊠	45	46 ~ 55	0.3885	
		M20x95	⊠	55	56 ~ 65	0.4137	
		M20x105	⊠	65	66 ~ 75	0.4389	
		M24x55	◎	12	13 ~ 20	0.5027	380
		M24x65	⊘	20	21 ~ 30	0.5396	
		M24x75	⊠	30	31 ~ 40	0.5764	
		M24x85	⊘	40	41 ~ 50	0.6133	
		M24x95	⊠	50	51 ~ 60	0.6501	
		M24x105	⊠	60	61 ~ 70	0.6869	
PLAIN WASHER 平垫圈	Q235B	t1 −2.5	thk×No. 厚度×个数	d=13.5 D=24		0.00494	/
		−3(A)		d=17.5 D=30		0.01065	
		−3(B)		d=22 D=37		0.01637	
		−4		d=26 D=44		0.03164	
SPRING WASHER 弹簧垫圈	Q235B	t2 −3	thk×No. 厚度×个数	d=13 D=21.5		0.00552	
				d=17 D=28		0.00932	
		−4		d=21 D=33.5		0.01761	
		−5		d=26 D=44		0.03955	

Note: The weight of single nut bolt includes one plain washer, one spring washer and one nut.
The weight of doubt nut bolt includes one plain washer and two nuts.
注:单螺母螺栓重包括一平垫圈，一弹簧垫圈，一螺母；双螺母螺栓重包括一平垫圈，两螺母。

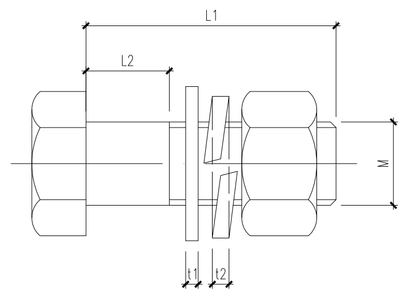

PRINCIPAL DIMENSION OF CONNECTING BOLT
连接螺栓的主要尺寸

Reference Drawings

Drwg. No.	Title
30-B003701S-T0802-005	±0.000m structure layout for pole 1 valve hall and firewall
30-B003701S-T0802-003	plan layout of pile cap for pole 1 valve hall and firewall
30-B003701S-T0802-002	General specification of foundations for pole 1 valve hall and firewall

Revisions	Name	Date	Notes
A	王轩	2018.06.15	First issue

巴基斯坦默蒂亚里—拉合尔±660kV直流输电工程
±660kV HVDC Project from Matiari to Lahore in Pakistan

NATIONAL TRANSMISSION & DESPATCH COMPANY (NTDC) LIMITED PAKISTAN

CONTRACTOR 国家电网 STATE GRID 中国电力技术装备有限公司 CHINA ELECTRIC EQUIPMENT INDUSTRY CORPORATION LTD.

SUBCONTRACTOR East China Electric Power Design Institute Co.,Ltd.

拉合尔±660kV换流站
±660kV Lahore Converter Station

设计阶段 PHASE: 施工图 Detail Design

M L H V D C - L C S - E C I - D D - C S - 0 8 0 3 - 0 0 1 A

	姓名 Name	日期 Date
设计 Designed	王轩	18.06.15
校核 Checked	金成峰	18.06.16
审核 Reviewed	邓明明	18.06.17
批准 Approved	加[illegible]	18.06.17

钢构架加工说明
Specification of Steel Gantry

电气		
专业 Speciality	会签 Sign	日期 Date

比例 Scale | 图号 DWG NO. 30-B003701S-T0803-001 | 版本 REV. A

594X841

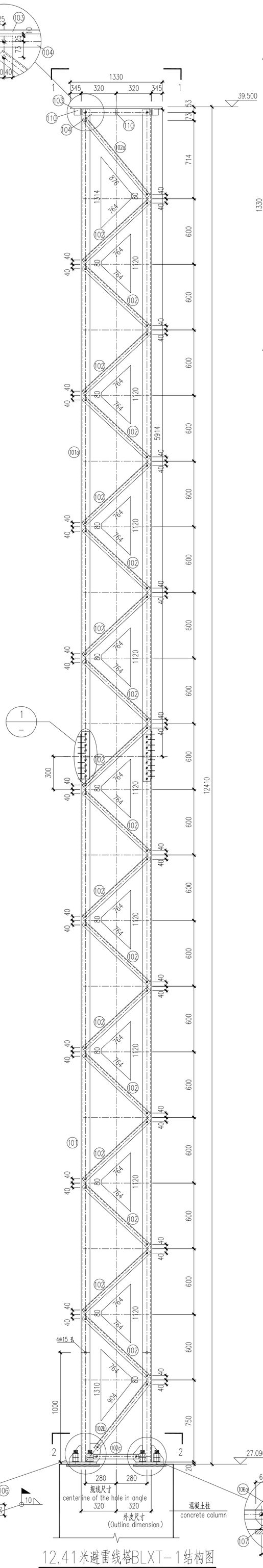

12.41米避雷线塔BLXT-1结构图

(位于混凝土柱上)

Structure drawing of 12.41m height lightning rod tower BLXT-1

(Over the concrete column)

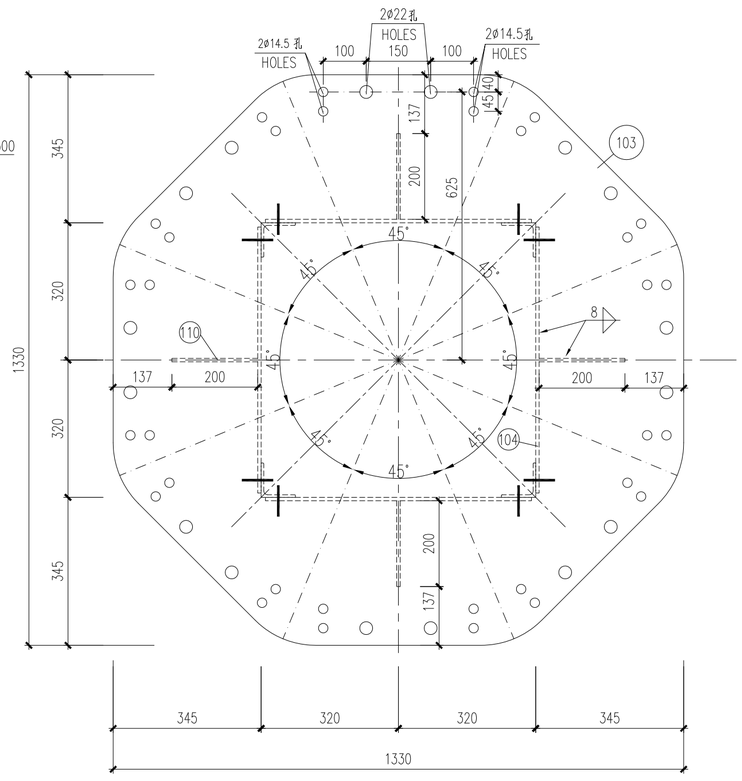

1—1

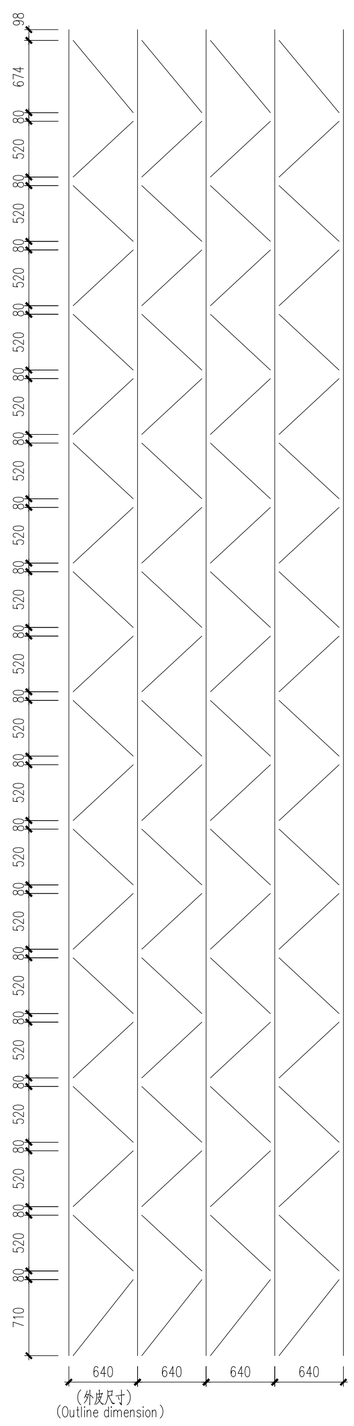

展开图

Unfold view

说明：

1. 本图中零米标高同阀厅零米标高。
2. 12.41米避雷线塔BLXT-1平面位置见T0802分册005图，共1座。
3. 除特殊注明外，本图钢材Q235B，所有连接铁件均满焊，未注明焊脚尺寸为8mm。
4. 构件（包括螺栓及其螺母、垫片）采用热镀锌防腐，现场焊接处同阀厅主体钢结构现场焊接处理。构件焊接应按照相应的美国焊接规程、规范的要求进行。
5. 材料表仅供参考，所有构件放样下料。
6. 其他说明见001图。

钢材材料表 Material list of steel

构件名称 Name	序号 NO.	规格 Type	长度(mm) Length(mm)	数量 Quantity	单重(kg) Unit weight(kg)	小计(kg) Total weight(kg)	备注 Note
12.41米避雷线塔BLXT-1 12.41m height lightning rod tower BLXT-1	101	HL80X10	6445	4	62.25	249.00	Q345B
	101a	HL80X10	5907	4	57.07	228.28	Q345B
	102	L45X5	814	72	2.74	197.28	
	102a	L45X5	926	4	2.89	11.56	
	102b	L45X5	779	4	2.63	10.52	
	102c	L45X5	410	4	1.38	5.52	
	103	-18X1330	1330	1	88.62	88.62	Q345B
	104	-8X60	610	4	2.30	9.2	
	105	-6X110	150	8	0.78	6.24	Q345B
	106	-6X110	175	4	0.91	3.64	Q345B
	106a	-6X85	150	4	0.60	2.4	Q345B
	107	-20X250	250	4	9.81	39.24	Q345B
	108	-6X70	435	8	1.44	11.52	Q345B
	109	HL70X6	435	4	2.79	11.16	Q345B
	110	-8X200	200	4	0.75	3.01	
	Total (kg) 合计(kg)					877.19	

以上为1座避雷线塔的钢材量。

The material list is for one tower.

螺栓明细表 Material list of bolts

构件名称 Name	规格 Type	符号 Symbol	数量 Quantity	单重(kg) Unit weight(kg)	小计(kg) Total weight(kg)	备注 Note
螺栓 Bolts	M16X50	ø	240	0.1602	38.448	6.8级，包含一平垫，一弹垫 Grade 6.8, include one washer and one lock washer
	螺栓总重(kg) Total weight(kg)				38.448	

以上为1座避雷线塔的螺栓量。

The material list is for one tower.

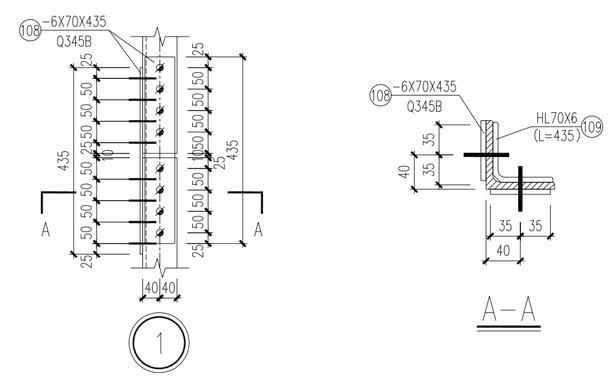

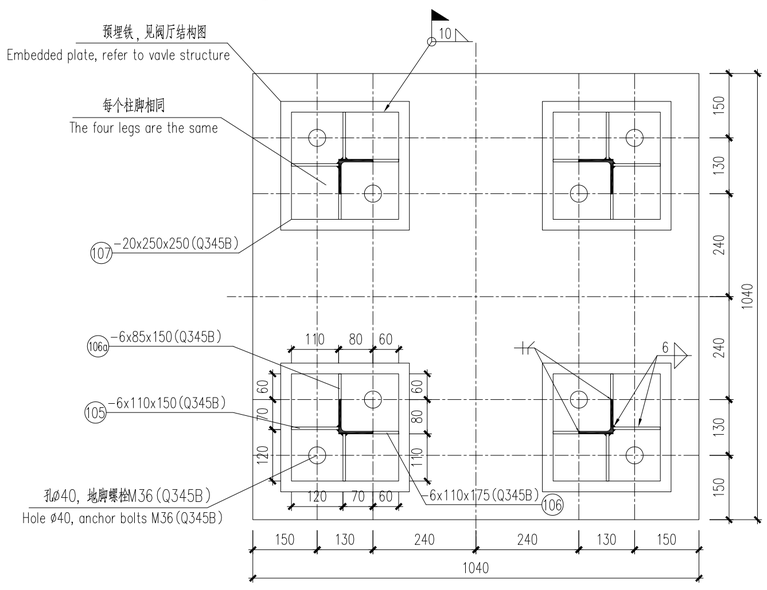

2—2

Notes:

1. The absolute altitude of elevation 0.000m is the same with the valve hall's, referring to the drawing T0802.
2. The location of 12.41m height lightning rod tower BLXT-1 refers to drawing T0402-005, total 1.
3. All the steel shall be grade Q235B where not otherwise noted, full welding with 8mm welding height for unspecified welding.
4. All steel members(include bolts and its nuts, washers) should be galvanized. The requirements of field welding refer to main steel structure's of valve hall. All production welding shall be carried out in accordance with the requirements of the relevant AWS of welding.
5. The material table is for reference only. All reinforcements could be placed after set out.
6. Other notes refer to drawing 001.

Reference Drawings

Drwg. No.	Title
30-B003701S-T0802-005	±0.000m structure layout for pole 1 valve hall and firewall
30-B003701S-T0802-003	plan layout of pile cap for pole 1 valve hall and firewall
30-B003701S-T0802-002	General specification of foundations for pole 1 valve hall and firewall

Revisions			
A	王轩	2018.06.15	First issue
	Name	Date	Notes

巴基斯坦默蒂亚里—拉合尔±660kV直流输电工程

±660kV HVDC Project from Matiari to Lahore in Pakistan

NATIONAL TRANSMISSION & DESPATCH COMPANY (NTDC) LIMITED PAKISTAN

CONTRACTOR 国家电网 STATE GRID 中国电力技术装备有限公司 CHINA ELECTRIC POWER EQUIPMENT AND TECHNOLOGY CO.,LTD.

SUBCONTRACTOR East China Electric Power Design Institute Co.,Ltd.

拉合尔±660kV换流站

±660kV Lahore Converter Station

设计阶段 PHASE: 施工图 Detail Design

M L H V D C - L C S - E C I - D D - C S - 0 8 0 3 - 0 0 2 A

	姓名 Name	日期 Date
设计 Designed	王轩	18.06.15
校核 Checked	金运峰	18.06.16
审核 Reviewed	邱明诚	18.06.17
批准 Approved	谢晓亮	18.06.17
比例 Scale		图号 DWG NO.

极1阀厅12.41米避雷线塔BLXT-1结构图(位于混凝土柱上)

Structure drawing of 12.41m height lightning rod tower BLXT-1 for Pole 1 valve hall (Over the concrete column)

30-B003701S-T0803-002 版本 REV. A

电气	郑煜	18.06.15
专业 Speciality	会签 Sign	日期 Date

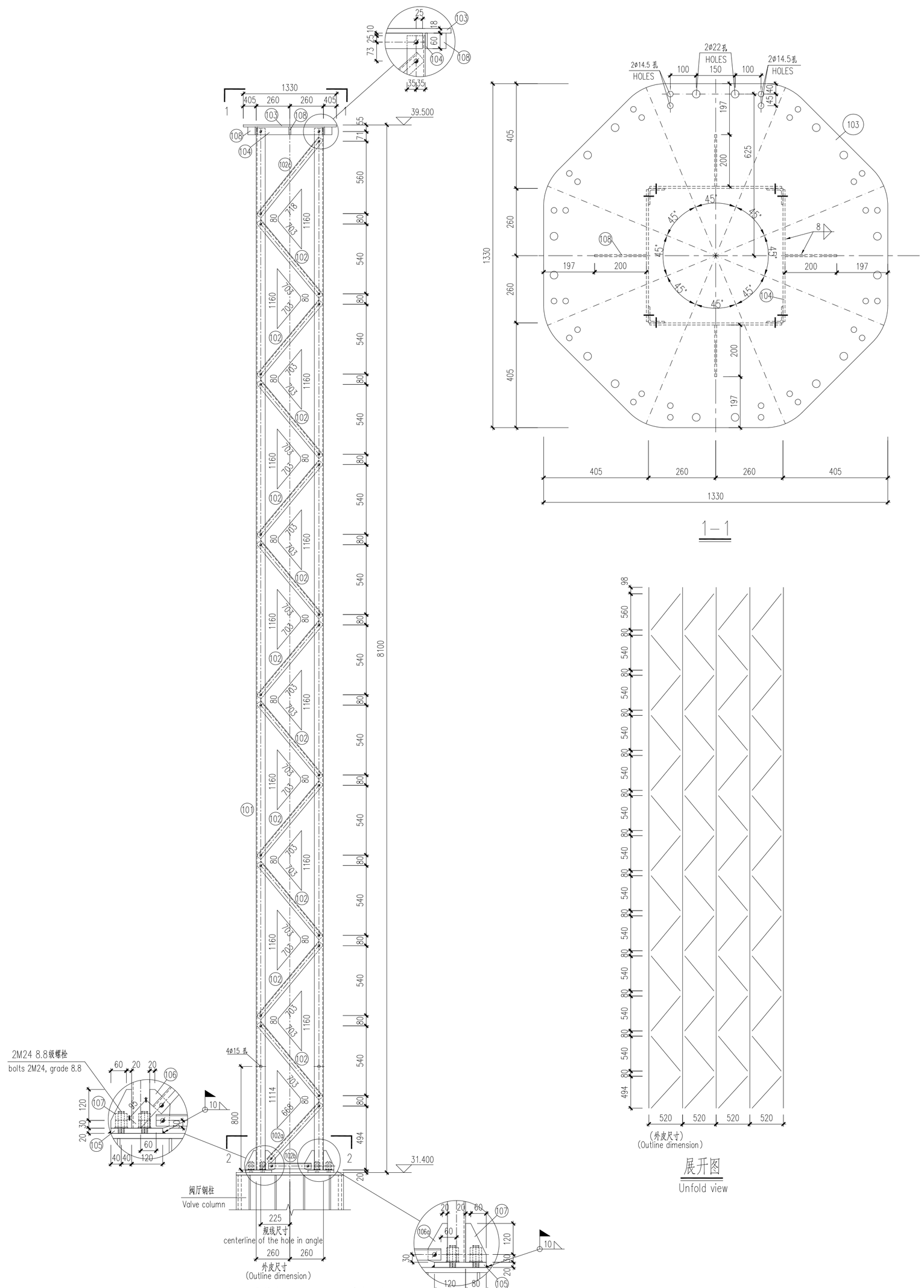

8.1米避雷线塔BLXT-2结构图

(位于阀厅钢柱上)

Structure drawing of 8.1m height lightning rod tower BLXT-2

(Over valve steel column)

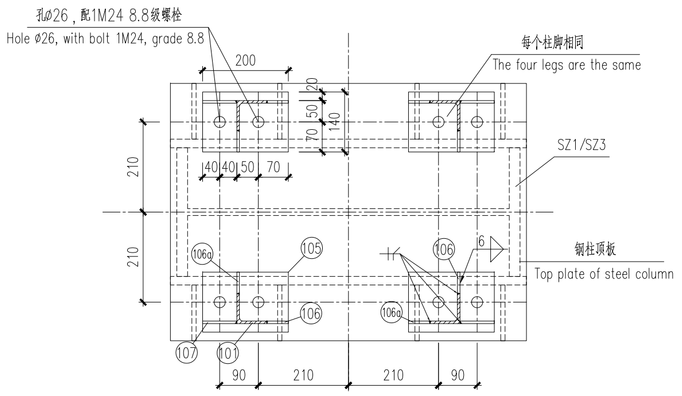

钢材材料表 Material list of steel

构件名称 Name	序号 NO.	规 格 Type	长 度(mm) Length(mm)	数 量 Quantity	单重(kg) Unit weight(kg)	小计(kg) Total weight(kg)	备 注 Note
8.1米避雷线塔BLXT-2 8.1m height lightning rod tower BLXT-2	101	HL70X8	8052	4	59.58	238.32	Q345B
	102	L45X5	753	44	2.54	111.76	
	102a	L45X5	598	4	2.02	8.08	
	102b	L45X5	330	4	1.11	4.44	
	102c	L45X5	768	4	2.59	10.36	
	103	-18X1330	720	1	65.11	65.11	Q345B
	104	-8X60	500	4	1.88	7.52	
	105	-20X140	200	4	4.40	17.6	Q345B
	106	-6X150	160	4	1.13	4.52	Q345B
	106a	-6X75	150	4	0.53	2.12	Q345B
	107	-6X80	150	4	0.57	2.28	Q345B
	108	-8X200	200	4	0.75	3.01	
	Total (kg) 合计(kg)					475.12	

以上为1座避雷线塔的钢材量。

The material list is for one tower.

螺栓明细表 Material list of bolts

构件名称 Name	规 格 Type	符号 Symbol	数 量 Quantity	单重(kg) Unit weight(kg)	小计(kg) Total weight(kg)	备 注 Note
螺栓 Bolts	M16X50		120	0.1602	19.224	6.8级，包含一平垫，一弹垫 Grade 6.8, include one washer and one lock washer
	M24X85		8	0.6133	4.9064	8.8级，包含一平垫，双螺母 Grade 8.8, include one washer and two nuts.
	螺栓总重(kg) Total weight(kg)				24.13	

以上为1座避雷线塔的螺栓量。

The material list is for one tower.

说明：

1. 8.1米避雷线塔避雷线塔BLXT-2平面位置见T0802分册005图，共5座。
2. 其他说明见001和002图。

Notes:

1. The location of 8.1m height lightning rod tower BLXT-2 refers to drawing T0802-005, total 5.
2. Other notes refer to drawing 001 and 002.

Reference Drawings

Drwg. No.	Title
30-B003701S-T0802-005	±0.000m structure layout for pole 1 valve hall and firewall
30-B003701S-T0802-003	plan layout of pile cap for pole 1 valve hall and firewall
30-B003701S-T0802-002	General specification of foundations for pole 1 valve hall and firewall

Revisions

	Name	Date	Notes
A	王轩	2018.06.15	First issue

巴基斯坦默蒂亚里—拉合尔±660kV直流输电工程

±660kV HVDC Project from Matiari to Lahore in Pakistan

NATIONAL TRANSMISSION & DESPATCH COMPANY (NTDC) LIMITED PAKISTAN

CONTRACTOR 国家电网 STATE GRID 中国电力技术装备有限公司 CHINA ELECTRIC POWER EQUIPMENT AND TECHNOLOGY CO.,LTD.

SUBCONTRACTOR East China Electric Power Design Institute Co.,Ltd.

拉合尔±660kV换流站

±660kV Lahore Converter Station

设计阶段 PHASE: 施工图 Detail Design

M L H V D C - L C S - E C I - D D - C S - 0 8 0 3 - 0 0 3 A

	姓名 Name	日期 Date
设计 Designed	王轩	18.06.15
校核 Checked	金洪涛	18.06.16
审核 Reviewed	郑明祥	18.06.17
批准 Approved	刘炳辉	18.06.17
比例 Scale		图号 DWG NO.

专业 Speciality	会签 Sign	日期 Date
电气	郑灿显	18.06.15

极1阀厅8.1米避雷线塔BLXT-2结构图(位于阀厅钢柱上)

Structure drawing of 8.1m height lightning rod tower BLXT-2 for Pole 1 valve hall (Over valve steel column)

30-B003701S-T0803-003

版本 REV. A

594X841

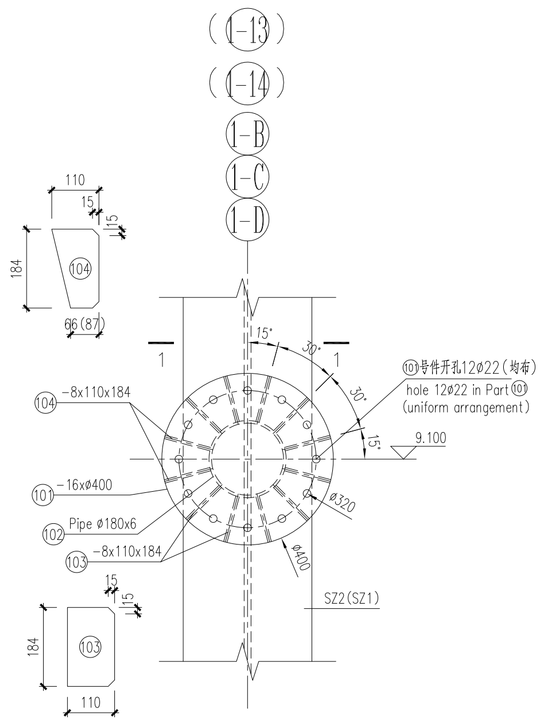

中性线侧墙支柱绝缘子C1支架

Neutral insulator C1 support on side wall of valve hall

(从阀厅内侧看)

(View inside valve hall)

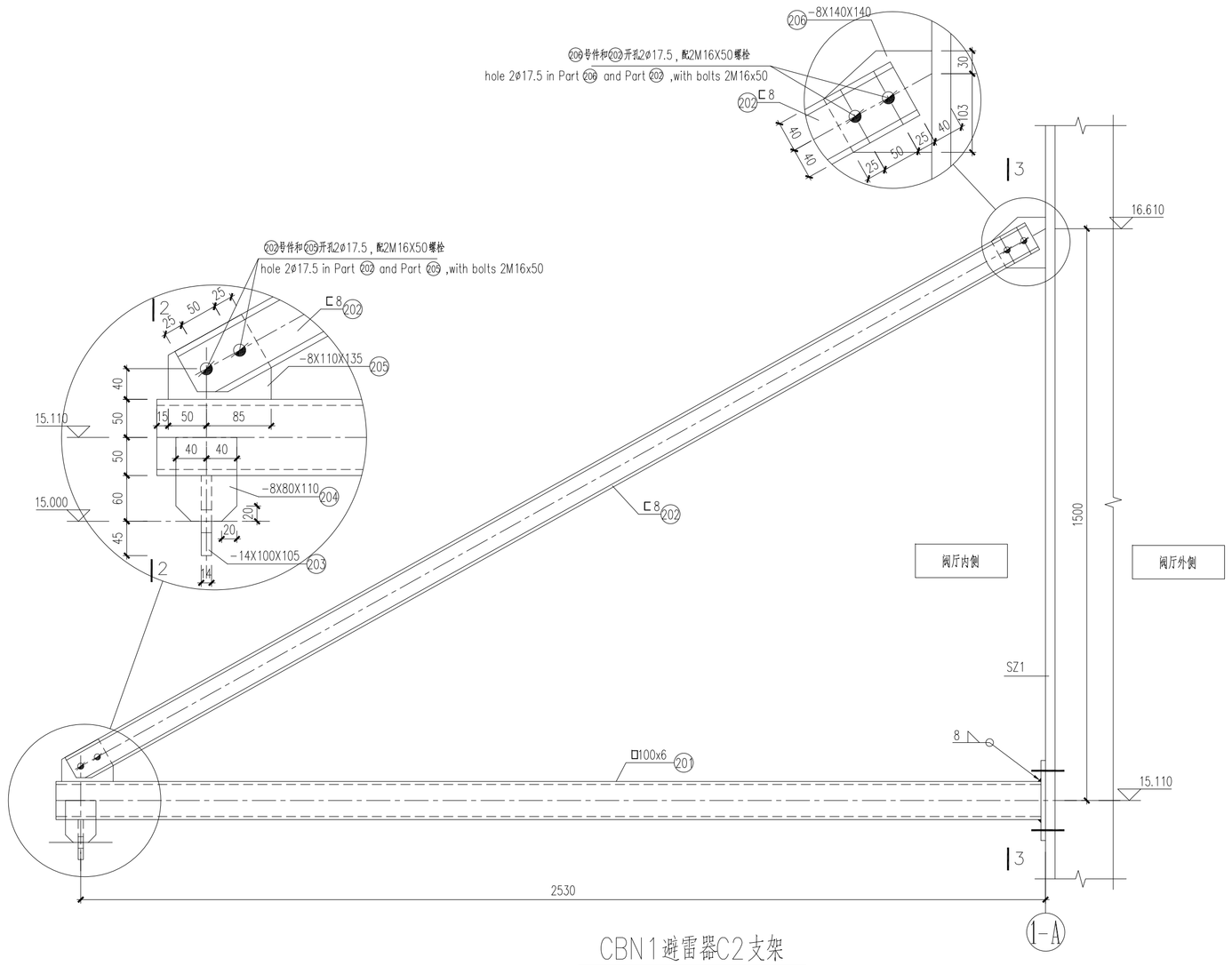

CBN1避雷器C2支架

CBN1 Arrester C2 support on side wall of valve hall

钢材材料表 Material list of steel

构件名称 Name	序号 NO.	规 格 Type	长度(mm) Length(mm)	数 量 Quantity	单重(kg) Unit weight(kg) (for one part)	小计(kg) Total weight(kg) (for one part)	合计(kg) Total weight(kg)	备 注 Note
中性线侧墙支柱绝缘子C1支架 Neutral insulator C1 support	101	-16xø400		1	15.78	15.78	35.76	
	102	ø180x6	184	1	4.74	4.74		
	103	-8x110	184	8	1.27	10.16		
	104	-8x110	184	4	1.27	5.08		
CBN1避雷器C2支架 CBN1 Arrester C2 support	201	□100x6	2583	1	45.74	45.74	78.01	
	202	⊏8	2881	1	23.18	23.18		
	203	-14X100	105	1	1.53	1.53		
	204	-8X80	110	2	0.55	1.10		
	205	-8x115	135	1	0.97	0.97		
	206	-8x140	140	1	1.23	1.23		
	207	-12X160	240	1	3.62	3.62		
	螺栓 Bolts	ø M16X50		4	0.1602	0.6408		6.8级，包含一平垫，一弹垫 Grade 6.8, include one washer and lock washer

以上均为1座支架的钢材量。

The material list is for one support.

说明：

1. 本图中零米标高同阀厅零米标高。
2. 中性线侧墙支柱绝缘子C1支架共5座，CBN1避雷器C2支架共1座。
3. 除特殊注明外，本图钢材Q235B，所有连接铁件均满焊，未注明焊脚尺寸为8mm。
4. 构件（包括螺栓及其螺母、垫片）采用热镀锌防腐，现场焊接处同阀厅主体钢结构现场焊接处理。构件焊接应按照相应的美国焊接规程、规范的要求进行。
5. 其他说明见001图。

Notes:

1. The absolute altitude of elevation 0.000m is the same with the valve hall's, referring to the drawing T0402.
2. There are 5 Neutral insulator C1 supports and 1 CBN1 Arrester C2 support in total .
3. All the steel shall be grade Q235B where not otherwise noted, full welding with 8mm welding height for unspecified welding.
4. All steel members(include bolts and its nuts, washers) should be galvanized. The requirements of field welding refer to main steel structure's of valve hall. All production welding shall be carried out in accordance with the requirements of the relevant AWS of welding.
5. Other notes refer to drawing 001.

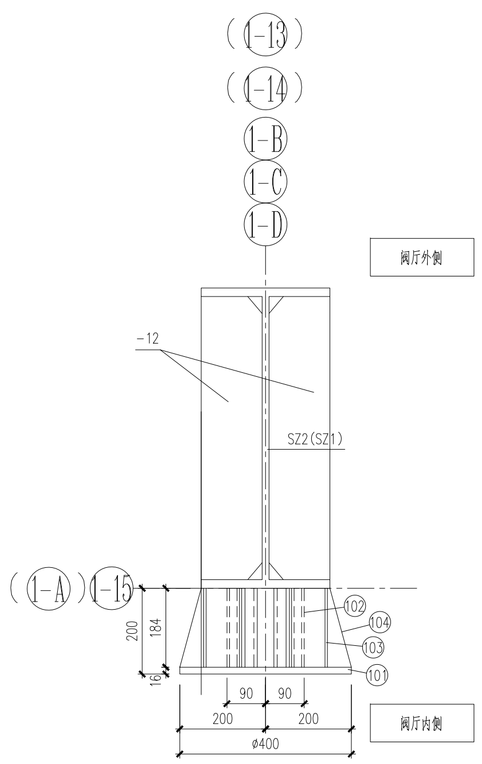

1—1

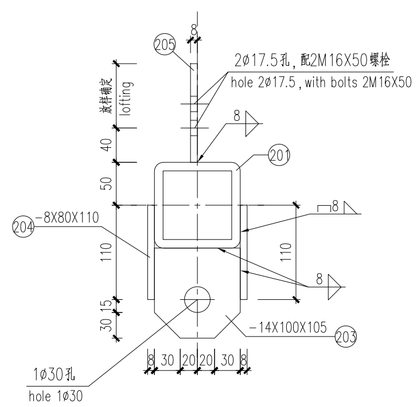

2—2

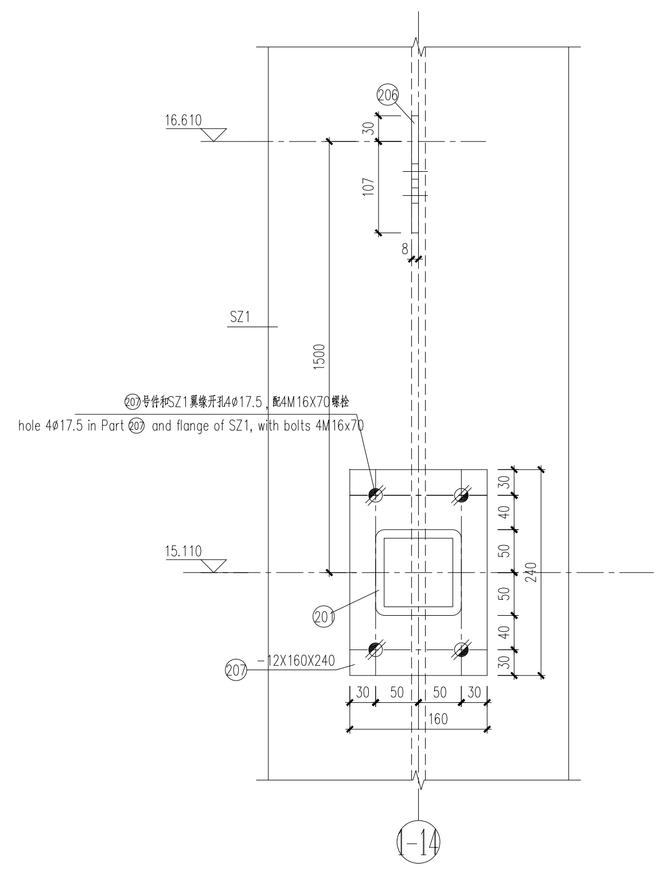

3—3

Reference Drawings	
Drwg. No.	Title
30-B003701S-T0802-005	±0.000m structure layout for pole 1 valve hall and firewall
30-B003701S-T0802-003	plan layout of pile cap for pole 1 valve hall and firewall
30-B003701S-T0802-002	General specification of foundations for pole 1 valve hall and firewall

Revisions			
A	王轩	2018.06.15	First issue
	Name	Date	Notes

巴基斯坦默蒂亚里—拉合尔±660kV直流输电工程

±660kV HVDC Project from Matiari to Lahore in Pakistan

NATIONAL TRANSMISSION & DESPATCH COMPANY (NTDC) LIMITED PAKISTAN

CONTRACTOR 国家电网 STATE GRID 中国电力技术装备有限公司 CHINA ELECTRIC EQUIPMENT TECHNOLOGY CO.,LTD.

SUBCONTRACTOR East China Electric Power Design Institute Co.,Ltd.

拉合尔±660kV换流站

±660kV Lahore Converter Station

设计阶段 PHASE: 施工图 Detail Design

M L H V D C - L C S - E C I - D D - C S - 0 8 0 3 - 0 0 4 A

	姓名 Name	日期 Date
设计 Designed	王轩	18.06.15
校核 Checked	金沃泽	18.06.16
审核 Reviewed	孙刚林	18.06.17
批准 Approved	刘炳辉	18.06.17

极1阀厅中性线侧墙支柱绝缘子C1支架及避雷器C2支架结构图

The support structure drawing of Neutral Insulator C1 and Arrester C2 on the side of Pole 1 valve wall

电气		
专业 Speciality	会签 Sign	日期 Date

比例 Scale | 图号 DWG NO. 30-B003701S-T0803-004 | 版本 REV. A

594X841

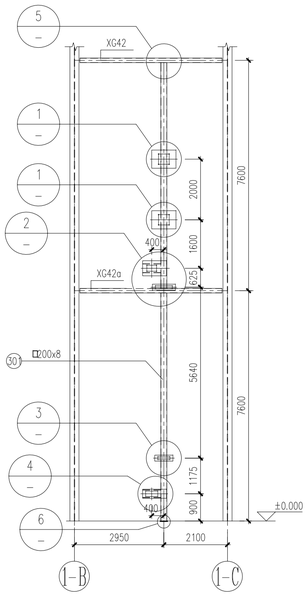

直流极线接地开关D3支架

Earthing switch D3 support on side wall of valve hall

(从阀厅内侧看)

(View inside valve hall)

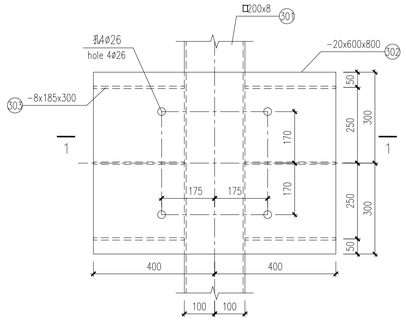

1

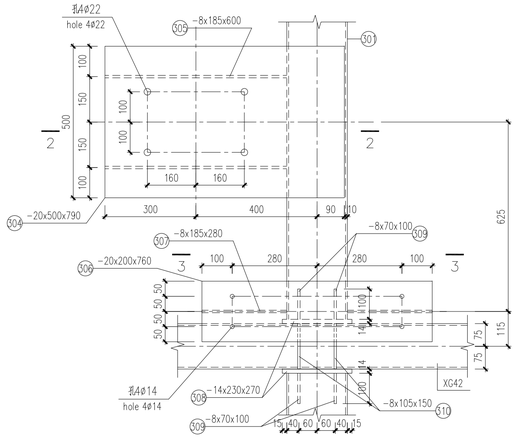

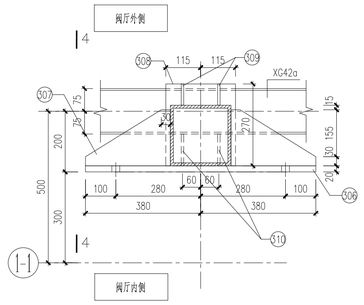

3-3

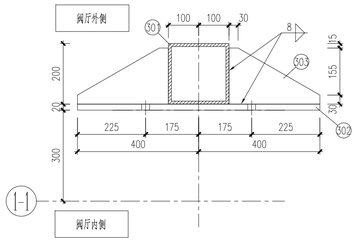

1-1

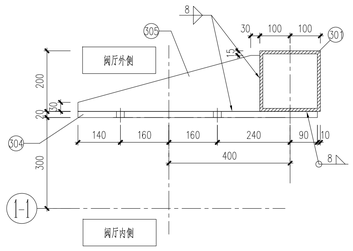

2-2

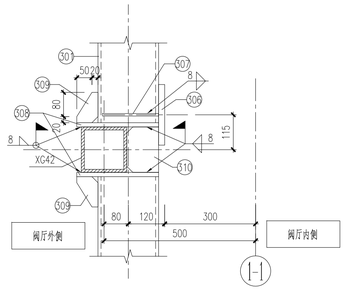

4-4

钢材材料表 Material list of steel

构件名称 Name	序号 NO.	规格 Type	长度(mm) Length(mm)	数量 Quantity	单重(kg) Unit weight(kg) (for one part)	小计(kg) Total weight(kg) (for one part)	合计(kg) Total weight(kg)	备注 Note
直流极线接地开关D3支架 Earthing switch D3 support	301	□200x8	14927	1	719.94	719.94	1030.13	
	302	-20x600	800	1	75.36	75.36		
	303	-8x185	300	6	3.49	20.94		
	304	-20x500	790	1	62.02	62.02		
	305	-8x185	600	2	6.97	13.94		
	306	-20x200	760	1	23.86	23.86		
	307	-8x185	280	2	3.25	6.5		
	308	-14x230	270	2	6.82	13.64		
	309	-8x70	100	4	1.32	5.28		
	310	-8x105	150	2	0.99	1.98		
	311	-20x200	600	1	18.84	18.84		
	312	-20x300	790	1	37.21	37.21		
	313	-8x185	600	2	6.97	13.94		
	314	-8x110	150	2	1.04	2.08		
	315	-8x55	100	2	0.35	0.7		
	316	-20x230	270	1	9.75	9.75		
	317	-10X230	230	1	4.15	4.15		

以上均为1座支架的钢材量。

The material list is for one support.

说明:

1. 直流极线接地开关D3支架共1座。
2. 相关要求见001和003图

Notes:

1. There is 1 Earthing switch D3 support in total.
2. Other notes refer to drawing 001 and 003.

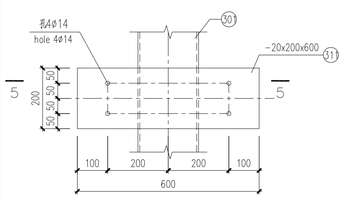

3

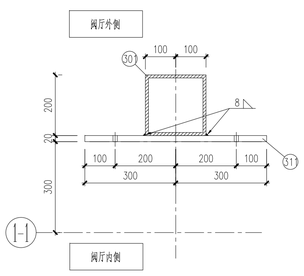

5-5

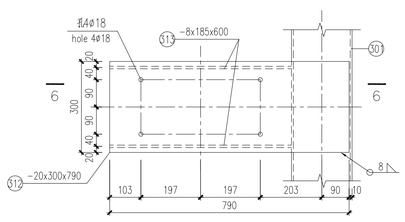

4

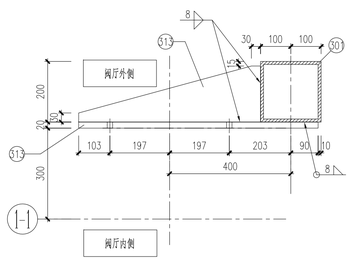

6-6

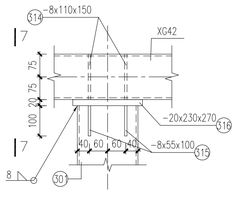

5

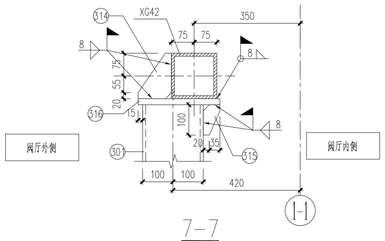

7-7

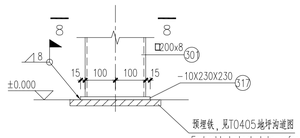

预埋铁，见T0405地坪沟道图

Embedded steel plate, refer to drawing T0405.

6

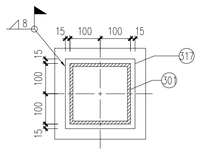

8-8

Revisions			
A	王轩	2018.06.15	First issue
	Name	Date	Notes

Reference Drawings

Drwg. No.	Title
30-B003701S-T0802-005	±0.000m structure layout for pole 1 valve hall and firewall
30-B003701S-T0802-003	plan layout of pile cap for pole 1 valve hall and firewall
30-B003701S-T0802-002	General specification of foundations for pole 1 valve hall and firewall

巴基斯坦默蒂亚里—拉合尔±660kV直流输电工程

±660kV HVDC Project from Matiari to Lahore in Pakistan

NATIONAL TRANSMISSION & DESPATCH COMPANY (NTDC) LIMITED PAKISTAN

CONTRACTOR 国家电网 STATE GRID 中国电力技术装备有限公司 CHINA ELECTRIC POWER EQUIPMENT AND TECHNOLOGY CO.,LTD.

SUBCONTRACTOR East China Electric Power Design Institute Co.,Ltd.

拉合尔±660kV换流站

±660kV Lahore Converter Station

设计阶段 PHASE: 施工图 Detail Design

M L H V D C - L C S - E C I - D D - C S - 0 8 0 3 - 0 0 5 A

	姓名 Name	日期 Date
设计 Designed	王轩	18.06.15
校核 Checked	金祝萍	18.06.16
审核 Reviewed	孙洲锋	18.06.17
批准 Approved	赵晓军	18.06.17
比例 Scale		图号 DWG NO.

极1阀厅侧墙直流极线接地开关D3支架结构图

The support structure drawing of Earthing switch D3 on the side of Pole 1 valve wall

30-B003701S-T0803-005

版本 REV. A

电气		
专业 Speciality	会签 Sign	日期 Date

594X841

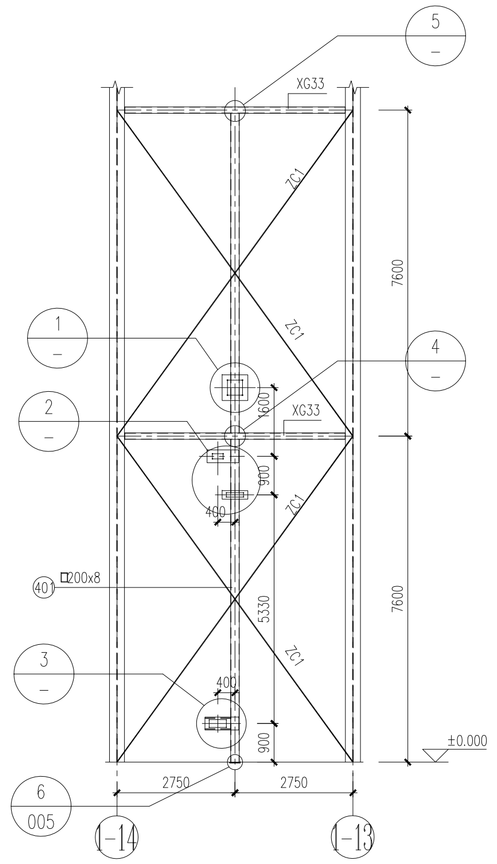

中性接地开关D4支架

Neutral earthing switch D4 support on side wall of valve hall
(从阀厅内侧看)
(View inside valve hall)

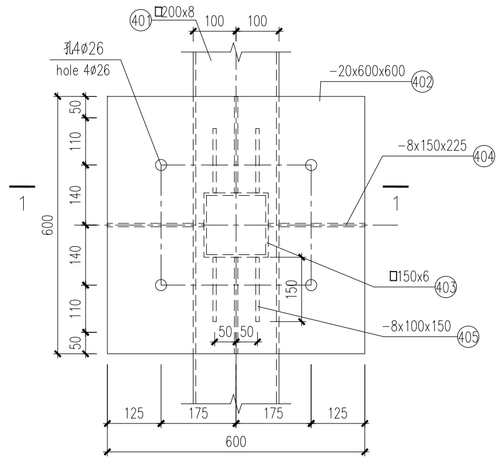

1

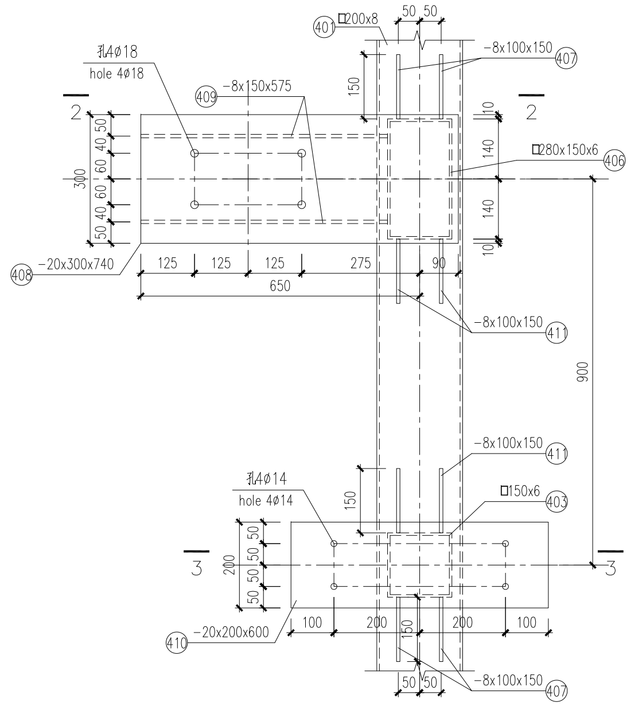

2

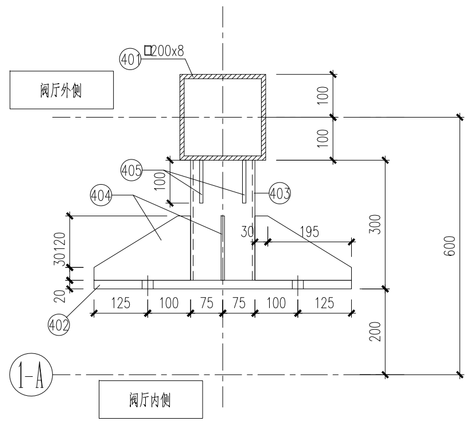

1-1

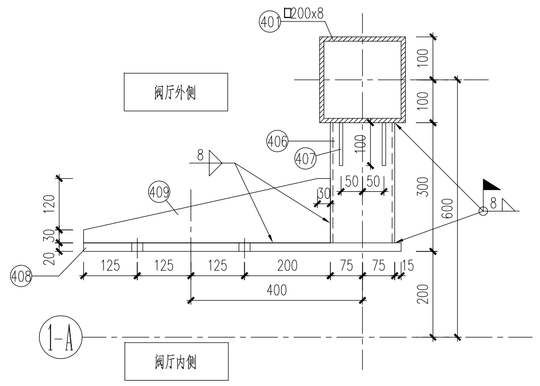

2-2

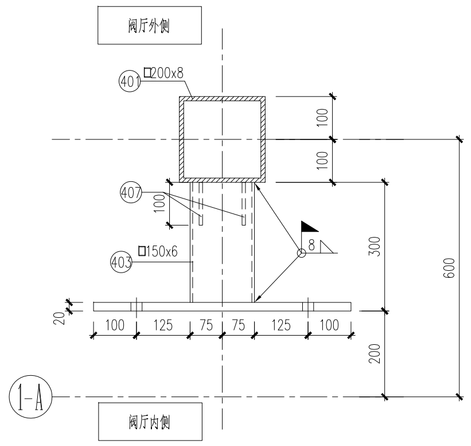

3-3

钢材材料表 Material list of steel

相件名称 Name	序号 NO.	规 格 Type	长 度(mm) Length(mm)	数 量 Quantity	单重(kg) Unit weight(kg) (for one part)	小计(kg) Total weight(kg) (for one part)	合计(kg) Total weight(kg)	备 注 Note
中性接地开关D4支架 Neutral earthing switch D4 support	401	□200x8	15105	1	738.17	738.17	981.26	
	402	-20x600	600	1	56.52	56.52		
	403	□150x6	280	2	7.60	15.2		
	404	-8x150	225	4	2.12	8.48		
	405	-8x100	150	4	0.94	3.76		
	406	□280x150x6	280	2	11.03	22.06		
	407	-8x100	150	8	0.94	7.52		
	408	-20x300	740	1	34.85	34.85		
	409	-8x150	575	2	5.42	10.84		
	410	-20x200	600	1	18.84	18.84		
	411	-8x100	150	4	0.94	3.76		
	412	-20x300	790	1	37.21	37.21		
	413	-8x150	625	2	5.89	11.78		
	414	-25x180	230	2	8.12	8.12		
	317	-10X230	230	1	4.15	4.15		详图5，见005图 Detail NO.6, refer to drawing 005

以上均为1座支架的钢材量。
The material list is for one support.

说明：
1. 中性接地开关D4支架共1座。
2. 相关要求见001和003图

Notes:
1. There is 1 Neutral earthing switch D4 support in total.
2. Other notes refer to drawing 001 and 003.

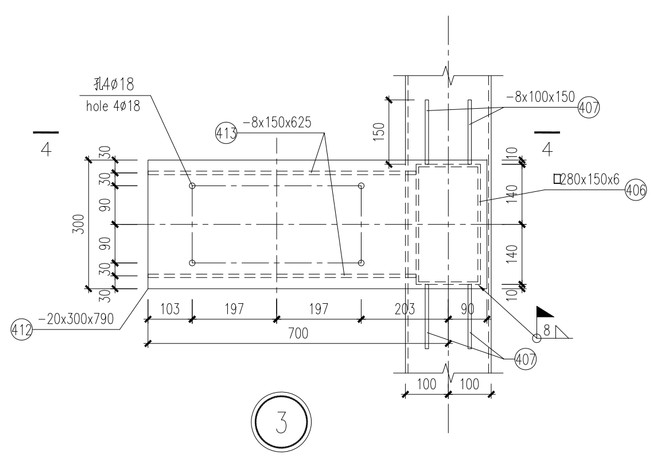

3

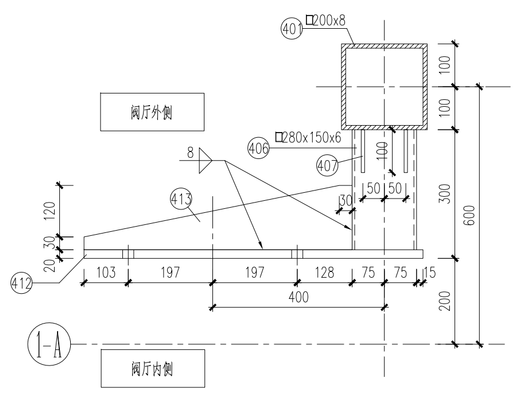

4-4

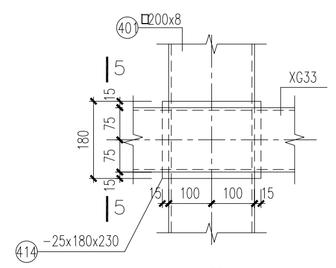

4

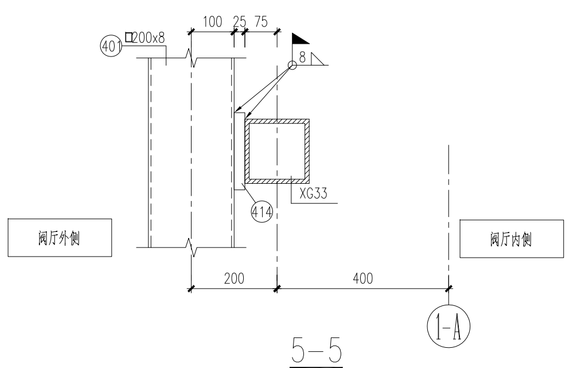

5-5

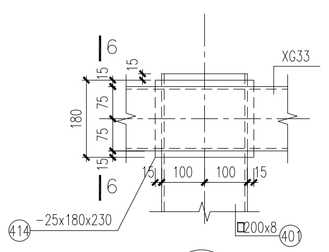

5

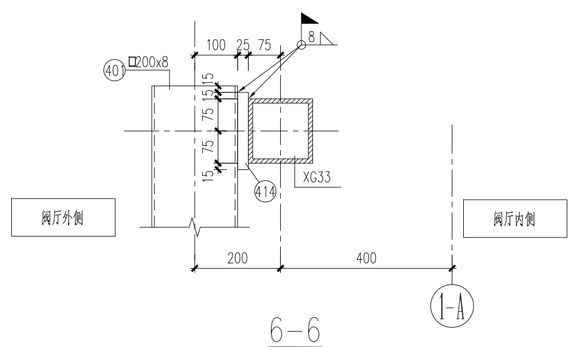

6-6

Reference Drawings

Drwg. No.	Title
30-B003701S-T0802-005	±0.000m structure layout for pole 1 valve hall and firewall
30-B003701S-T0802-003	plan layout of pile cap for pole 1 valve hall and firewall
30-B003701S-T0802-002	General specification of foundations for pole 1 valve hall and firewall

Revisions

	Name	Date	Notes
A	王轩	2018.06.15	First issue

巴基斯坦默蒂亚里—拉合尔±660kV直流输电工程
±660kV HVDC Project from Matiari to Lahore in Pakistan

NATIONAL TRANSMISSION & DESPATCH COMPANY (NTDC) LIMITED PAKISTAN

CONTRACTOR 国家电网 STATE GRID 中国电力技术装备有限公司 CHINA ELECTRIC POWER TECHNOLOGY EQUIPMENT CO.,LTD.

SUBCONTRACTOR East China Electric Power Design Institute Co.,Ltd.

拉合尔±660kV换流站
±660kV Lahore Converter Station

设计阶段 PHASE: 施工图 Detail Design

M L H V D C - L C S - E C I - D D - C S - 0 8 0 3 - 0 0 6 A

	姓名 Name	日期 Date
设计 Designed	王轩	18.06.15
校核 Checked	金晓峰	18.06.16
审核 Reviewed	邓州林	18.06.17
批准 Approved	[illegible]	18.06.17

极1阀厅侧墙中性接地开关D4支架结构图

The support structure drawing of Neutral earthing switch D4 on the side of Pole 1 valve wall

电气		
专业 Speciality	会签 Sign	日期 Date

比例 Scale

图号 DWG NO. 30-B003701S-T0803-006

版本 REV. A

594X841